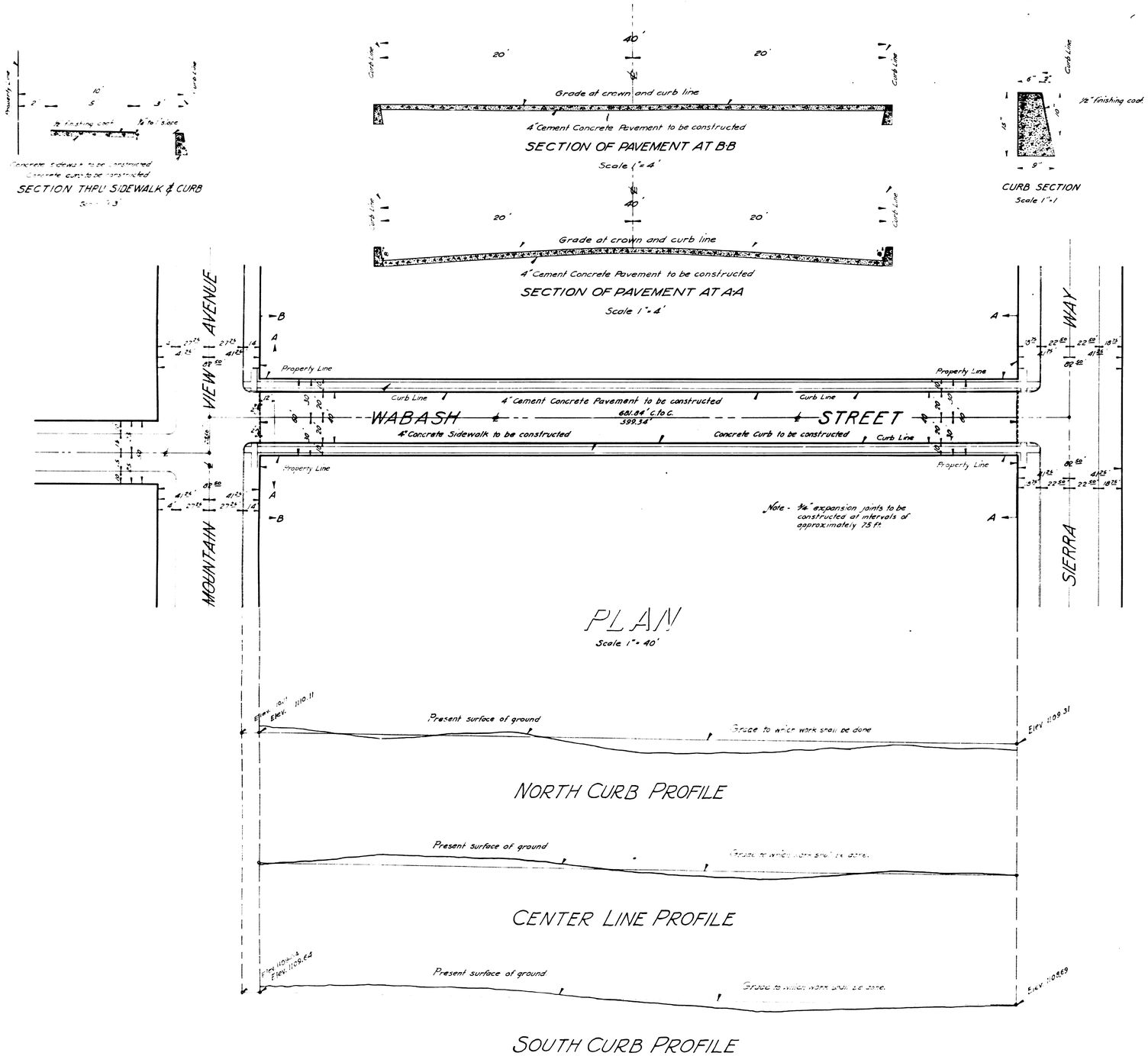

PART NO. 1

PLAN NO. 940

FOR THE IMPROVEMENT OF WABASH STREET

BETWEEN THE WEST LINE OF SIERRA WAY AND A POINT 2 FT. WEST OF THE EAST LINE OF MOUNTAIN VIEW AVENUE

IN THE CITY OF SAN BERNARDINO CALIF

April 1927

W. P. Burritt
City Engineer

LEGEND

"or in. means inch or inches.
' or ft. means foot or feet.
No. means number.
Elev. means elevation
℄ means center line.
c. to c. means center to center.
Concrete curb to be constructed shown thus ..... in section thus
Concrete sidewalk to be constructed shown thus ..... in section thus
4" Cement concrete pavement to be constructed shown thus ..... in section thus

TITLE TO STREET

Title to Wabash Street is by deed recorded in Book 616 of Deeds page 125 records of San Bernardino County.

GRADE

Grade of Wabash St. was established by resolution June 27, 1927.

PLAN ADOPTED
July 18, 1927.

PROFILE LEGEND

Black lines show present approximate surface of ground.
Red lines show the grade to which work shall be done.

Scales { Horizontal 1" = 40'
Vertical 1" = 4'

NOTE - All elevations shown in red ink are in feet and are above a plane which is 1045.28 ft. below the City bench Mark as established by Ord. NO. 383 City of San Bernardino Calif.

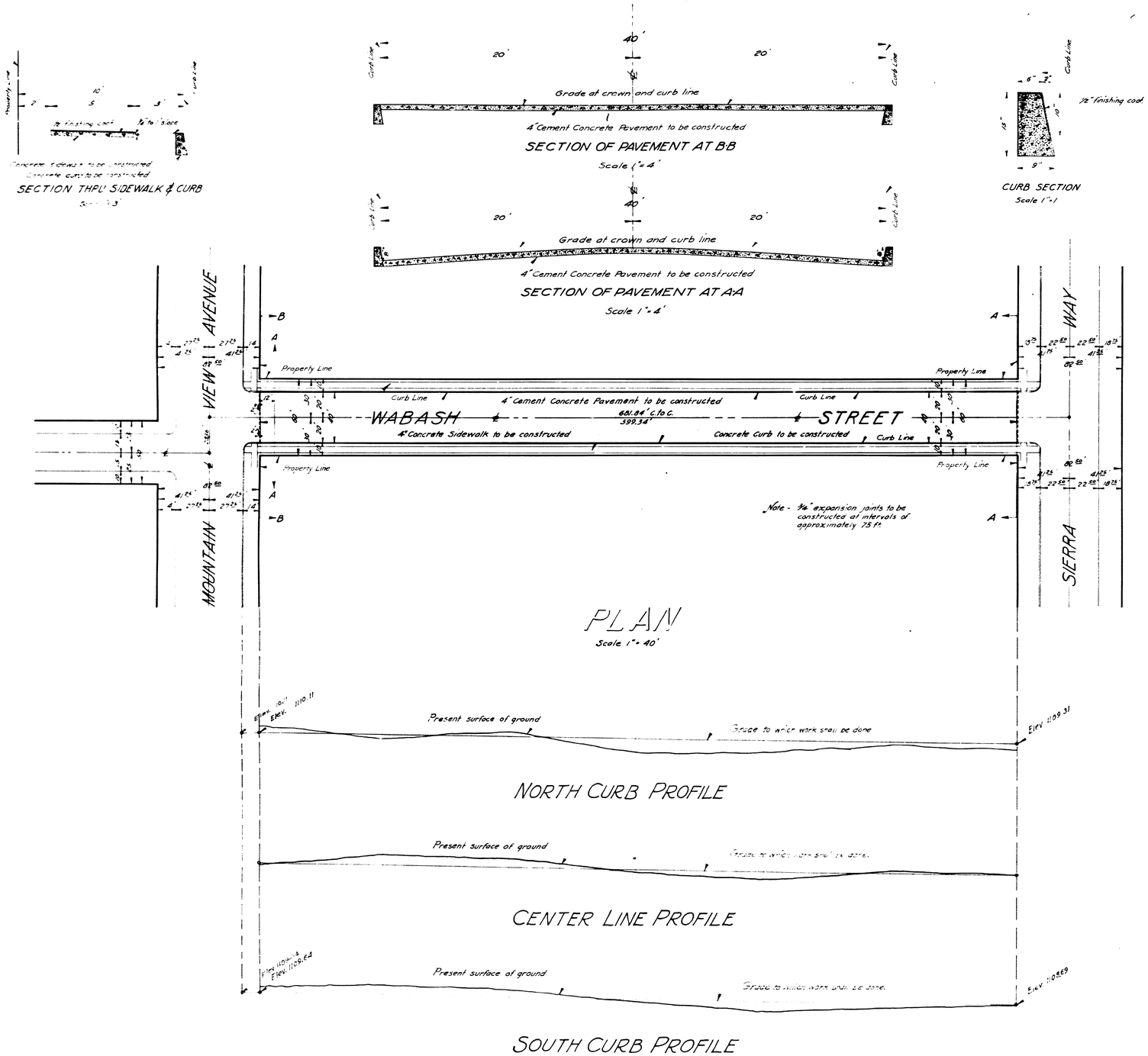

PART NO. 1

PLAN NO. 940

FOR THE IMPROVEMENT OF WABASH STREET

BETWEEN THE WEST LINE OF SIERRA WAY AND A POINT 2 FT. WEST OF THE EAST LINE OF MOUNTAIN VIEW AVENUE

IN THE CITY OF SAN BERNARDINO CALIF

April 1927

W. P. Burritt
City Engineer

LEGEND

"or in. means inch or inches.
' or ft. means foot or feet.
No. means number.
Elev. means elevation
℄ means center line.
c. to c. means center to center.
Concrete curb to be constructed shown thus ..... in section thus
Concrete sidewalk to be constructed shown thus ..... in section thus
4" Cement concrete pavement to be constructed shown thus ..... in section thus

TITLE TO STREET

Title to Wabash Street is by deed recorded in Book 616 of Deeds page 125 records of San Bernardino County.

GRADE

Grade of Wabash St. was established by resolution June 27, 1927.

PLAN ADOPTED
July 18, 1927.

PROFILE LEGEND

Black lines show present approximate surface of ground.
Red lines show the grade to which work shall be done.

Scales { Horizontal 1" = 40'
Vertical 1" = 4'

NOTE - All elevations shown in red ink are in feet and are above a plane which is 1045.28 ft. below the City bench Mark as established by Ord. NO. 383 City of San Bernardino Calif.